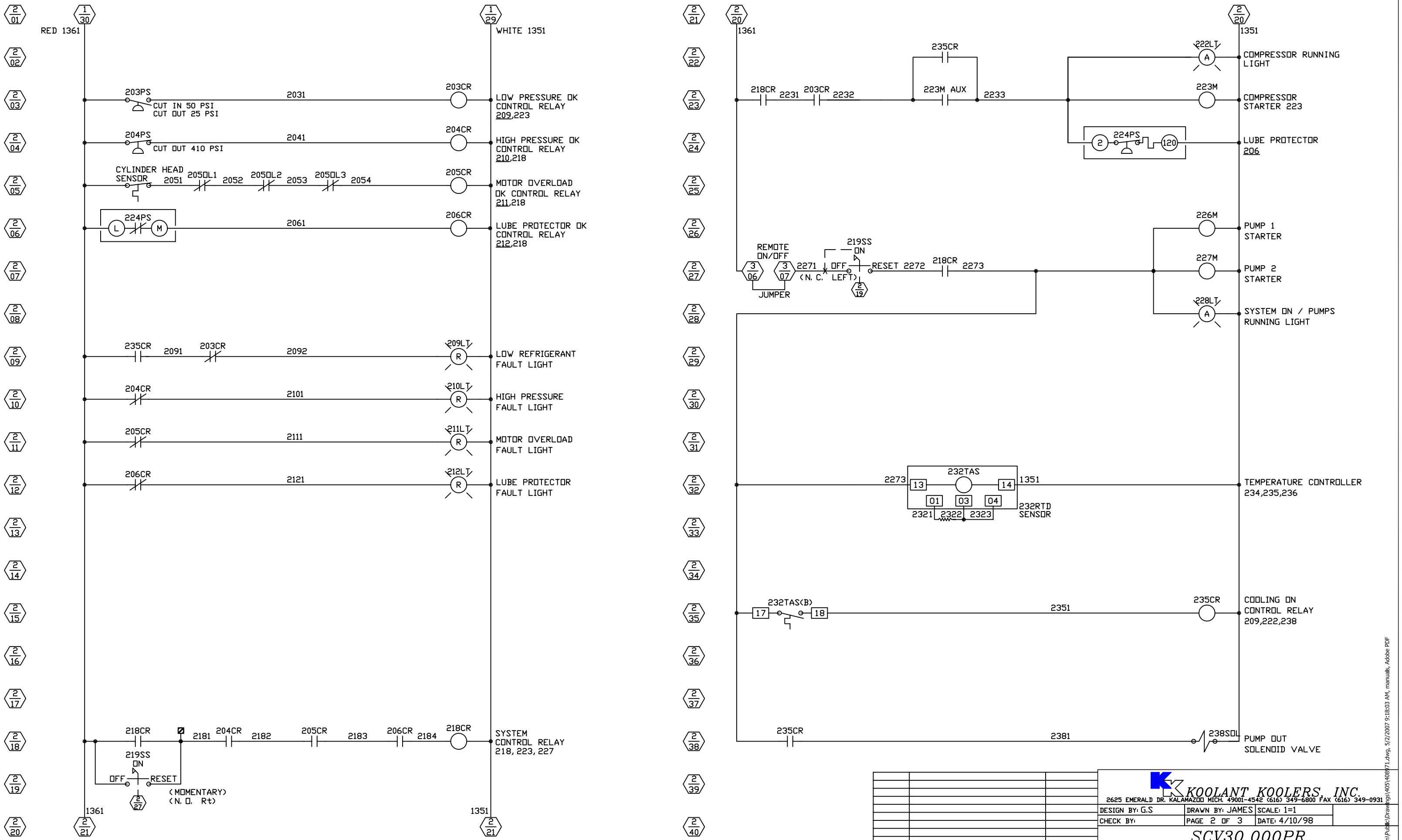

ALL DIMENSIONS ARE IN INCHES

DATE	DESCRIPTION OF REVISION	APPROVED BY

KOOLANT KOOLERS, INC.
2625 EMERALD DR. KALAMAZOO MICH. 49001-4542 (616) 349-6800 FAX (616) 349-0931

DESIGN BY: G.S	DRAWN BY: JAMES	SCALE: 1=1
CHECK BY:	PAGE 2 OF 3	DATE: 4/10/98

SCV30,000PR

ELECTRICAL

DRAWING NO. 408971

\\Kmain\Public\Drawings\405\408971.dwg, 5/2/2007 9:18:03 AM, manuals, Adobe PDF